MODENTIC

Three Piece High Pressure Screwed Ball Valve, Reduced Bore, PN210

Fig no. HPV-40A Redued Bore

1/4" ~ 2" DN 8- DN 50

Features :

Bar material ball valve, ISO 5211 Mounting Flange
Blow out proof stem, Anti-static design
360 degree rotation design
For Chemical, Industrial Application, In-line Maintenance
Super Alloy upon request

Standard Compliance :

Body wall thickness : EN 12516-1/2/3
Threaded end : BS 21 (BSP)
BSPT
ISO 228-1G
DIN 2999
ISO 7-1Rp
Face to Face : MD's standard
Body material : DIN
Pressure testing : EN 12266

Specification :

End connection : Thread end
Working Pressure : 210 bar (CWP)
Temperature : -20 to 80°C for Delrin
-20 to 250°C for Peek

MATERIALS LIST

NO.	PART NAME	MATERIAL
1	BODY	1.1141
4	BALL	ASTM A351 Gr.CF8M
5	STEM	17-4PH
9	END CAP	1.1141
11	BODY SEAL	DELRIN/GRAPHITE
12	SEAT	DELRIN/PEEK
13	THRUST WASHER	DELRIN/PEEK
14	STEM PACKING	PTFE.+25%C.F.
15	GLAND BUSH	SS304
19	HANDLE	SS304
20	SET SCREW	SS304
21	HANDLE COVER	PLASTIC
22	STEM NUT	SS304
24	HANDLE NUT	ASTM A2 70
28	STOP PLATE	SS304
29	BELLEVILLE WASHER	SS304-CSP
30	TAB WASHER	SS304
31	O-RING	VITON
32	PACKING FOLLOWER	TFM1600
33	STOP PIN	SS304
35	BODY BOLT	SCM440
36	BOLT WASHER	S45C
37	NUT	S45C
50	STEM ADAPTER	SS304

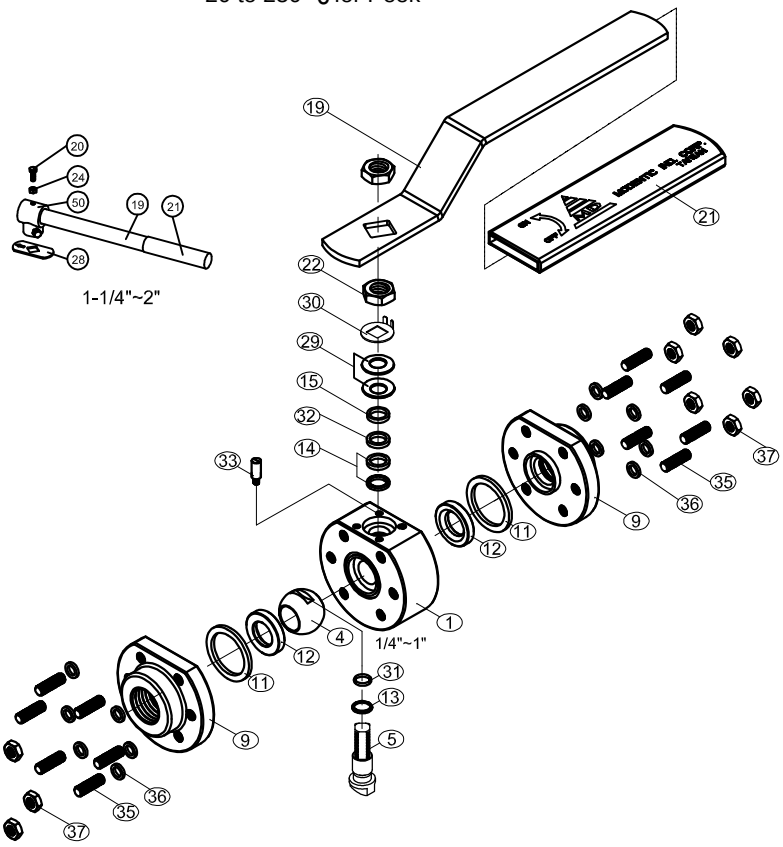

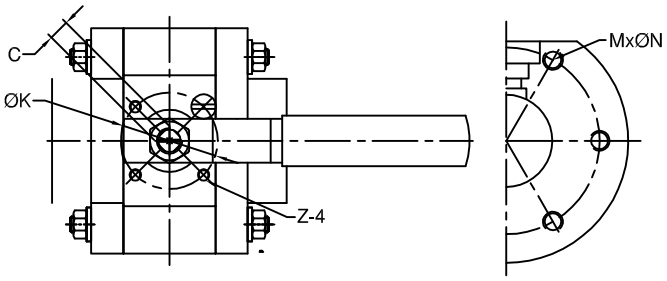

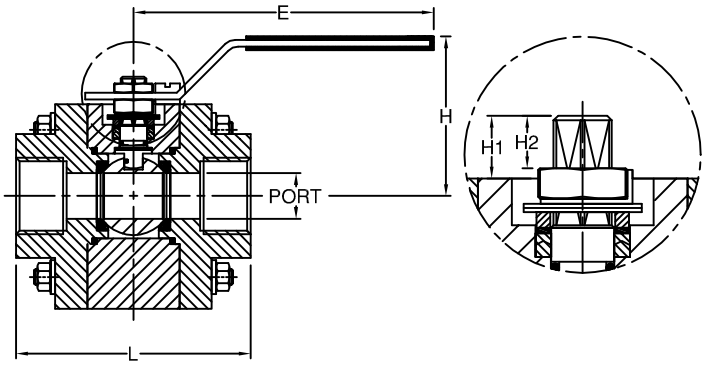

DIMENSIONS

unit:mm

SIZE		PORT	L	E	H	H1	H2	C	M	ØN	ØK	Z
DN8	1/4"	9.5	85.0	151.0	61.0	12.6	7.0	9.0	4	5/16"-18UNC	36.0	M5
DN10	3/8"	11.6	85.0	151.0	61.0	12.6	7.0	9.0	4	5/16"-18UNC	36.0	M5
DN15	1/2"	12.5	85.0	151.0	61.0	12.6	7.0	9.0	4	5/16"-18UNC	36.0	M5
DN20	3/4"	16.0	89.0	151.0	67.0	19.55	10.3	9.0	4	5/16"-18UNC	42.0	M5
DN25	1"	20.0	102.0	183.0	81.0	16.4	10.0	9.0	6	5/16"-18UNC	42.0	M5
DN32	1-1/4"	25.0	111.0	183.0	97.0	24.05	11.5	11.0	6	5/16"-18UNC	42.0	M5
DN40	1-1/2"	32.0	119.0	285.0	113.0	34.5	17.5	14.0	6	3/8"-16UNC	50.0	M6
DN50	2"	38.0	126.0	285.0	117.0	32.1	17.5	14.0	6	1/2"-13UNC	50.0	M6